EMSO TIME SERIES CONFERENCE
OBSERVING OCEAN SOUND
20-22 OCTOBER 2021
CANARY ISLANDS SPAIN

A CABLED DEEP-SEA ACOUSTIC STATION FOR LONG-TERM GEOPHYSICS MEASUREMENTS IN THE MEDITERRANEAN SEA

S. Biagi[1]*, F. Ameli[2], C. Caruso[3], G. Cuttone[1], C. Distefano[1], E. Giorgio[1], F. Italiano[3], G. Lazzaro[3], M. Longo[3], C.A. Nicolau[2], A. Orlando[1], S. Pulvirenti[1], S. Sciré Scappuzzo[3]

[1]INFN – Laboratori Nazionali del Sud (LNS), Via S. Sofia 62, 95123 Catania, Italy
[2]INFN – Sezione Roma, P.le A. Moro 2, 00185 Roma, Italy
[3]INGV – Sezione di Palermo, Via Ugo La Malfa 153, 90146 Palermo, Italy
*e-mail: simone.biagi@lns.infn.it

In the framework of the "Marine Hazard" project, a high-performance acoustic platform for continuous and real-time monitoring of coastal marine systems is being developed. The acoustic station will monitor deep sounds at high sensibility up to Sea State Zero equivalent noise, with the bandwidth extended towards low frequencies down to 1 Hz and high dexterity of spatial reconstruction. It will be able to track and identify with high precision different submarine acoustic sources, monitor and characterise acoustic noises generated by anthropic sources, and analyse the impact they produce in marine environments. The station is equipped with an Ocean Bottom Seismometer, two high resolution broadband hydrophones and a high-resolution pressure sensor, able to detect tsunami events. It will exploit the KM3NeT/IDMAR infrastructure, which offers connectivity for power, control, and continuous data transfer via ROV wet mateable connectors. The acoustic station will be deployed on the seabed and directly connected to the IDMAR network with a dedicated interlink cable.

Deep Underwater Infrastructure in the Mediterranean Sea

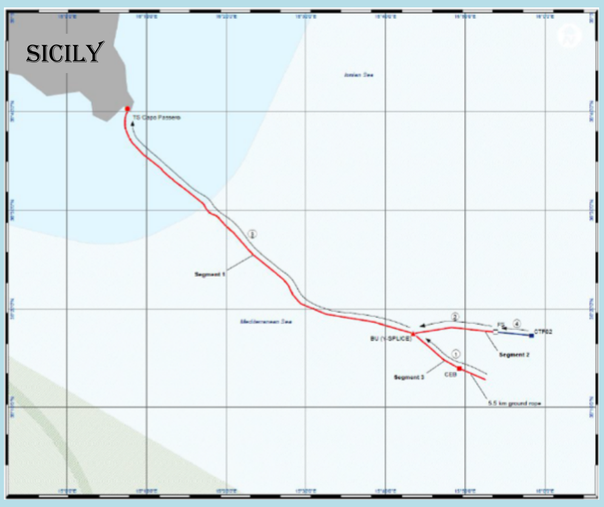

The marine area that will host the acoustic station is located in a flat region close to the Malta continental shelf, at a depth of 3,500 m, in the Mediterranean Sea 80 km away the Sicilian coast. The IDMAR project has funded the realisation and completion of a deep underwater infrastructure composed of a network of cables and junction boxes for power and data transmission. The main elements of the infrastructure are two electro-optical cables approximately 100 km long, that are connected to an onshore laboratory located in Portopalo di Capo Passero, Sicily, Italy. The IDMAR infrastructure hosts a km^3-scale underwater telescope, KM3NeT, for astrophysics neutrino detection, currently under construction. The Marine Hazard station will be perfectly integrated in the detector layout. We foresee the possibility to share physics data between all the involved partners.

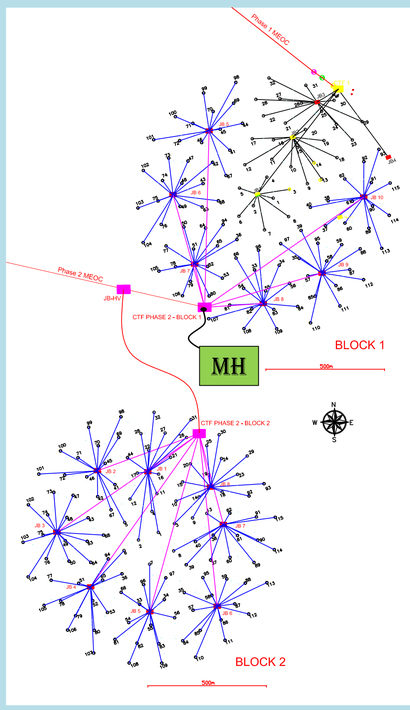

INSTRUMENTATION, CUSTOM TECHNOLOGY, SCIENTIFIC PURPOSES

Hydrophones

Compact, 24-bit digital hydrophones able to log and stream real-time waveforms, spectral and event data. The sensor will allow to evaluate anthropic noise as well as to track and identify different acoustical sources

CTD

Conductivity, Temperature and Depth sensor, will allow to measure deep water physical features and gather unique long-term data.

OBS

Ultra-low power broadband seismometer for ocean bottom deployments. Deep seismometer will allow to extend the coverage of seismic network to unknown, low-noise areas, producing exceptionally high-quality data.

Broadband Acoustic Spectrum

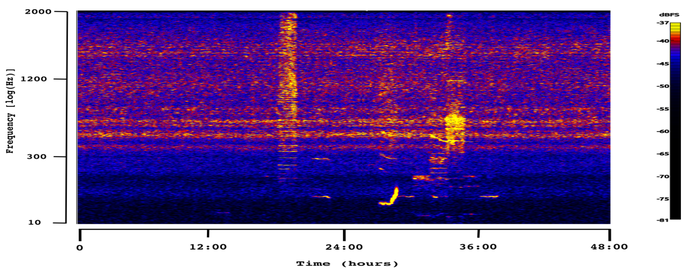

Typical underwater acoustic noise spectrogram where anthropic noise sources are detected.

Block diagram and control electronics

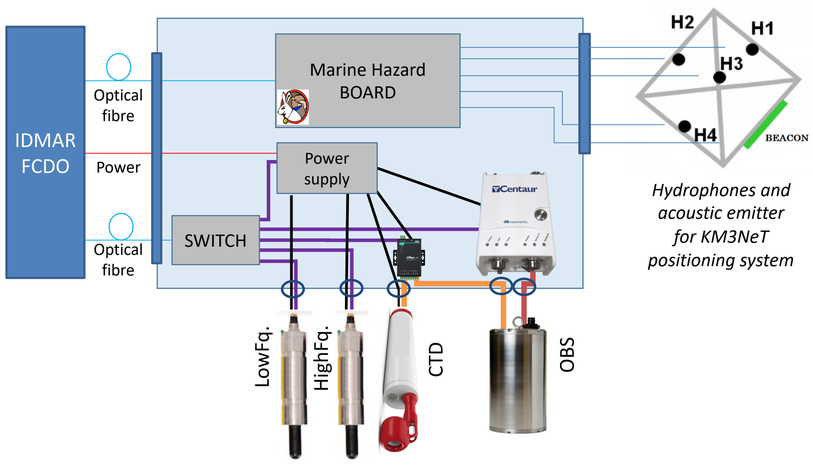

We are developing custom electronics for remote and real-time control of the instruments, and for power distribution. The system will exploit the optical fibre system for onshore data transfer, via a board based on the "WhiteRabbit" technology. It is under discussion the possibility to connect a system of 4 hydrophones and an acoustic emitters, also useful for the KM3NeT positioning system.

NEXT STEPS: INTEGRATION, LAB TESTS, DEPLOYMENT AND CONNECTION

The acoustic station will be able to: Triangulate the 3D position of acoustic sources, following their trajectory; Allow acoustic analysis in a large range of frequencies; Study of background noise; Study seismic parameters; Monitor the quality of environmental waters.

The Portopalo DataCenter allows to: Realtime monitor of data; High-bandwith connectivity; Data processing with computing power.

We foresee to finalise the integration and test of the station before the end of 2022. Then, taking profit of a shared sea campaign with KM3NeT/IDMAR, the station will be connected and immediately powered on for data taking.

ISTITUTO NAZIONALE DI GEOFISICA E VULCANOLOGIA

INFN Istituto Nazionale di Fisica Nucleare